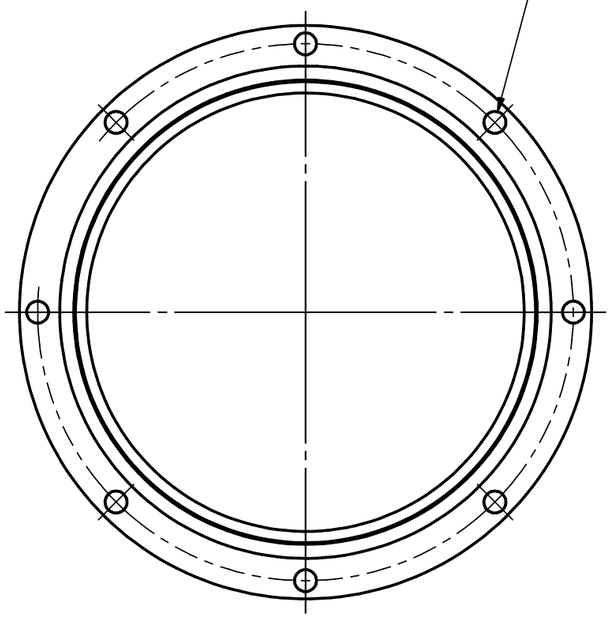

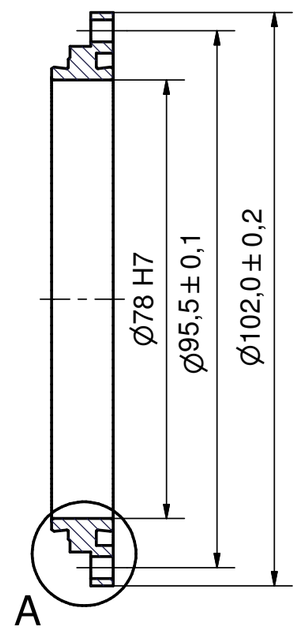

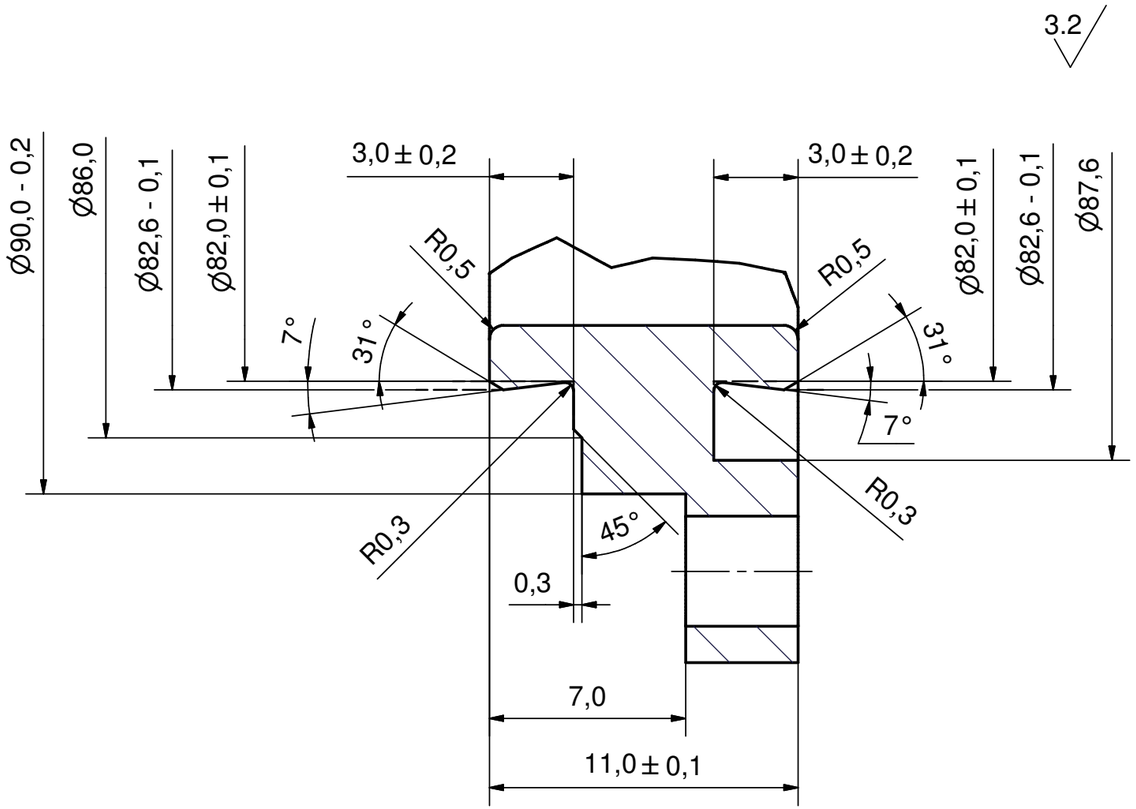

A (5 : 1)

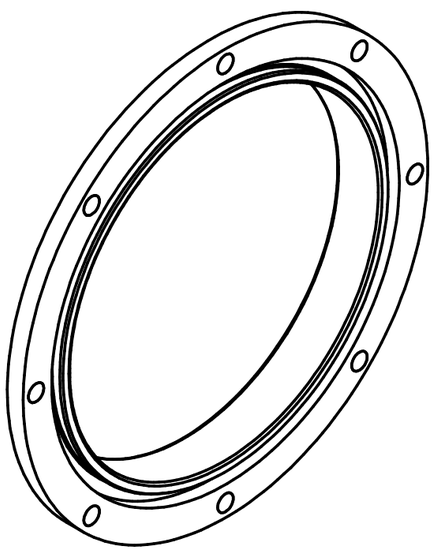

Issued all design changes as Rev C (TIO) - 4/19/07 - SAB

						Rev. C
					Scale : 1:1	mat: Brass, 360 Alloy
					ASSEMBLY : *75 kW CW Input Coupler*	
				Date	Name	DESIGNATION :
				Drawn	10/5/04	Churanov
				Checked	01-12-07	VM
				Standard		
						OUTER RING
						100.200.001 — 1
State	Changes	Date	Name			A3